O R D E R

Grand piano legs – appropriate for Steinway

Please send your order via Fax: **+48 62 762217-9**
Tel.: +48 62 762217-8

Art. No. 410

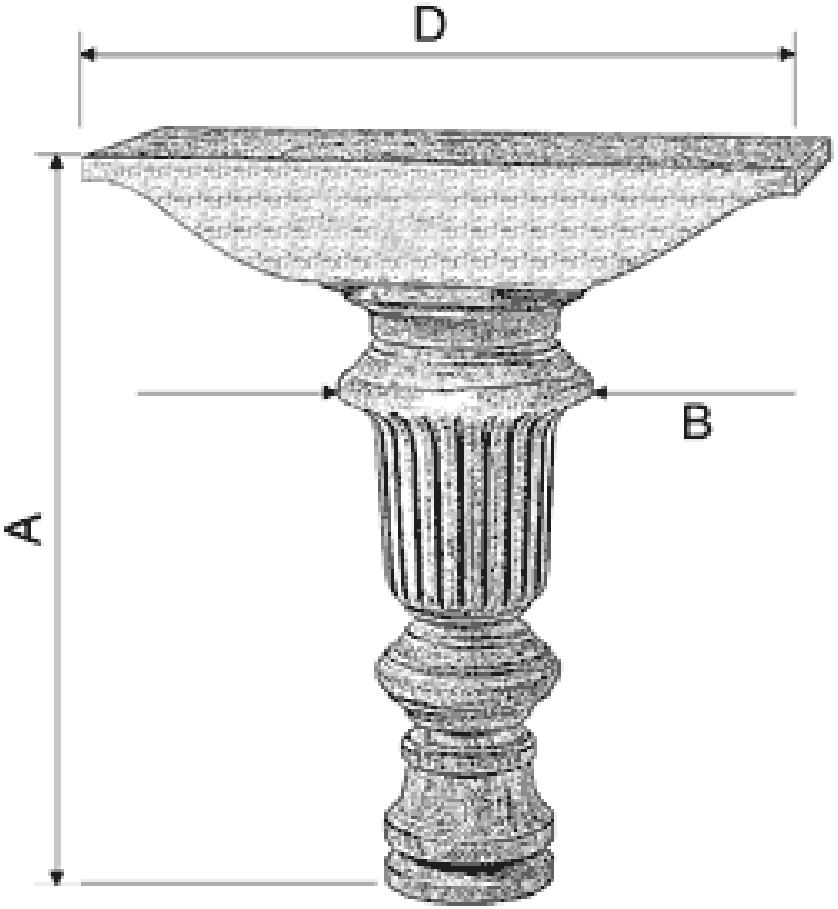

Dimension / Art. No.	A	B	D	Version/Finish	Quantity
410/1	590 mm	195 mm	520 mm		
Individual dimensions					

Company/Signature
Date: